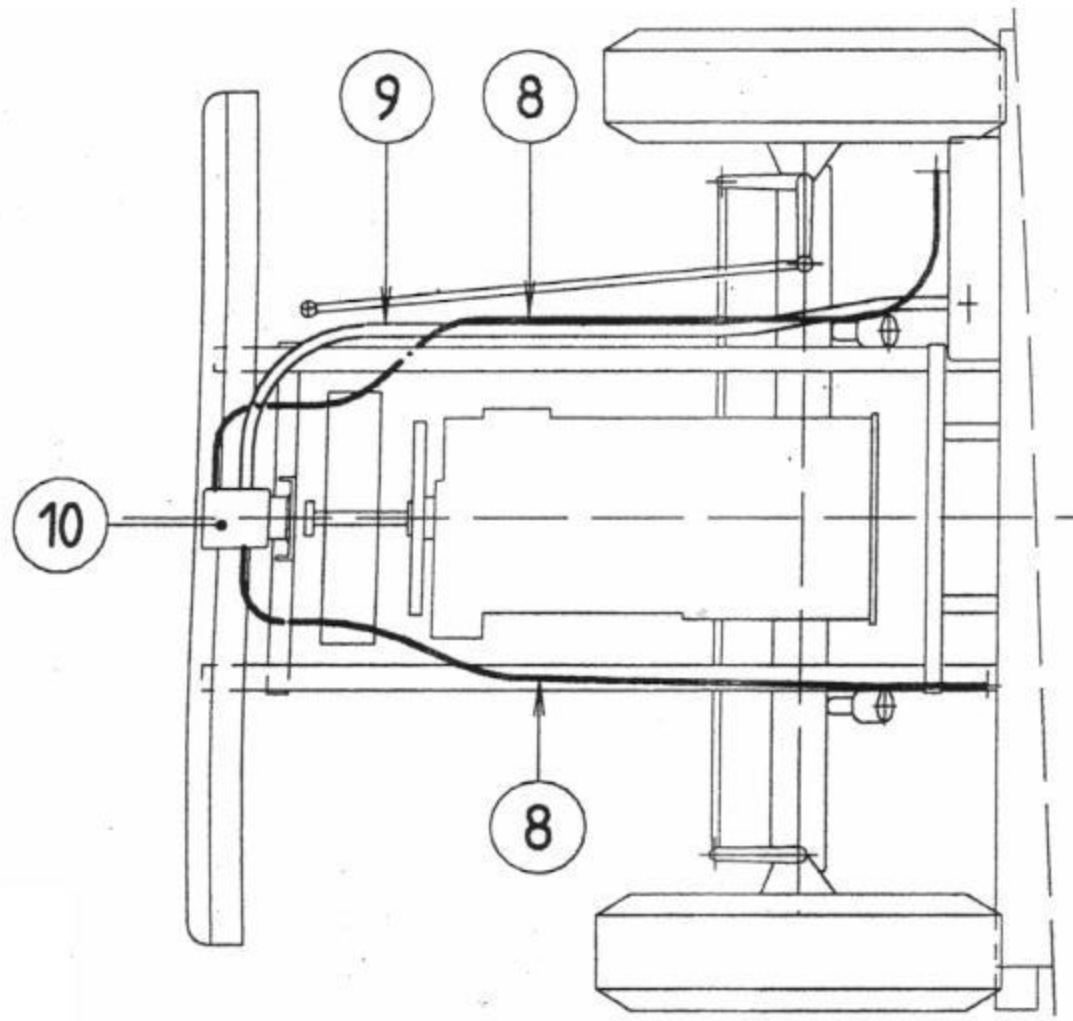
9
8
10
8

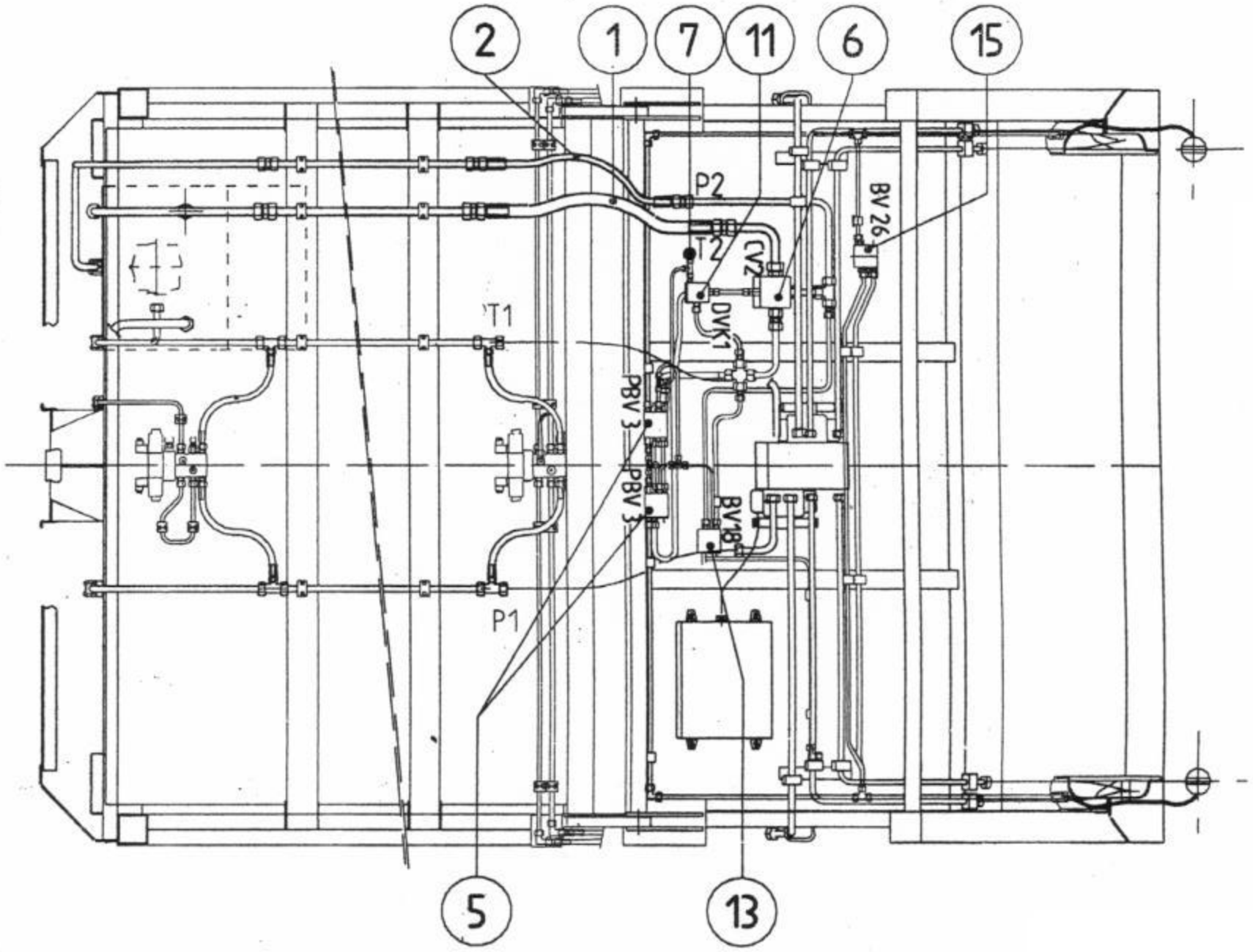
2
1
7
11
6
15
P2
T2
CV2
DVK1
BV 26
T1
PBV 3
PBV 3
BV18
P1
5
13

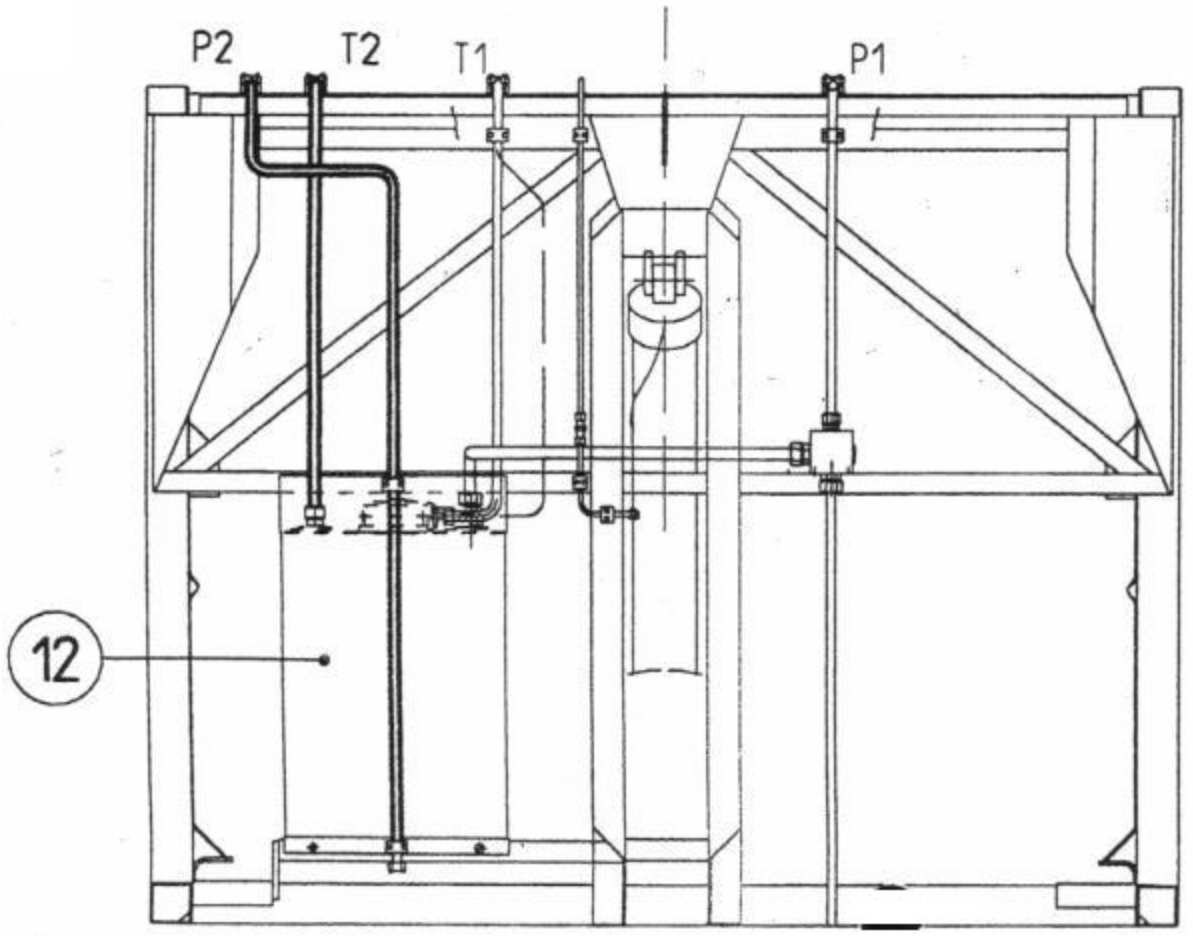
P2
T2
T1
P1
12

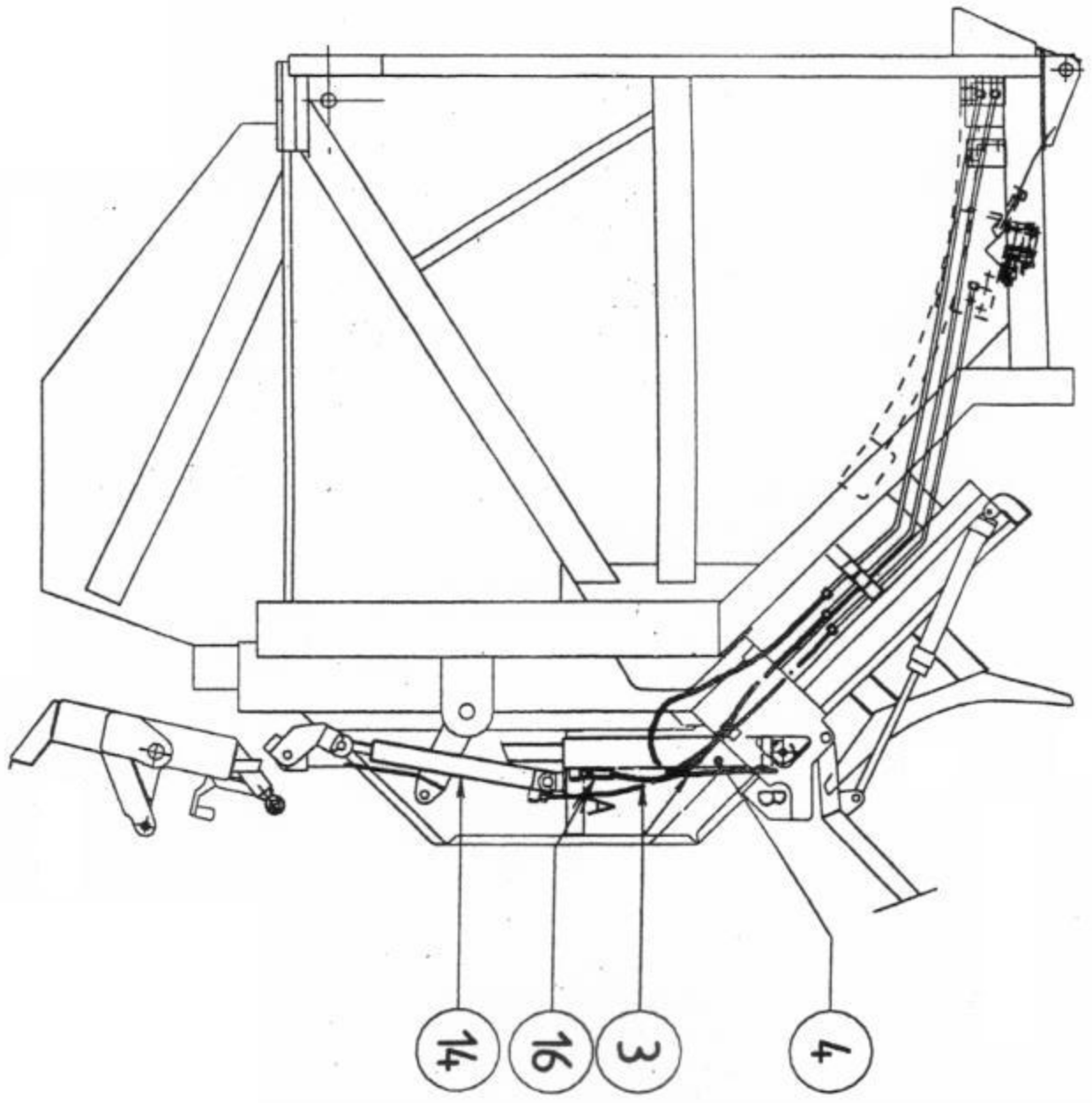
14
16
3
4